Cambridge Assessment International Education

Cambridge IGCSE™

CANDIDATE NAME	

CENTRE NUMBER						CANDIDATE NUMBER				

DESIGN & TECHNOLOGY **0445/42**

Paper 4 Systems & Control **October/November 2022**

1 hour

You must answer on the question paper.

No additional materials are needed.

INSTRUCTIONS

- Section A: answer **all** questions.
- Section B: answer **one** question.
- Use a black or dark blue pen. You may use an HB pencil for any diagrams or graphs.
- Write your name, centre number and candidate number in the boxes at the top of the page.
- Answer in the space provided.
- Do **not** use an erasable pen or correction fluid.
- Do **not** write on any bar codes.
- You may use a calculator.

INFORMATION

- The total mark for this paper is 50.
- The number of marks for each question or part question is shown in brackets [ ].
- All dimensions are in millimetres unless otherwise stated.

This document has **20** pages. Any blank pages are indicated.

DC (RW/FC) 303201/3
© UCLES 2022

Section A

Answer **all** questions in this section.

1 Fig. 1.1 shows two methods of packaging drinks.

Fig. 1.1

(a) Give **one** environmental reason for using glass bottles.

..... [1]

(b) Give **one** functional reason for using plastic bottles.

..... [1]

(c) Name the type of structure used in both bottles in Fig. 1.1.

..... [1]

2 Fig. 2.1 shows a skeleton leaf.

Fig. 2.1

State the type of structure that forms the leaf.

..... [1]

3 Most electricity pylons are made from steel.
Give **three** reasons why steel is a suitable material for the manufacture of electricity pylons.

1 .....

.....

2 .....

.....

3 .....

.....
[3]

4 Use sketches to show an example of:

- a first order lever
- a third order lever.

first order lever

third order lever

[2]

5 Give **three** reasons for choosing to use spur gears to transmit motion in a mechanism.

1 .....

.....

2 .....

.....

3 .....

.....
[3]

6 Fig. 6.1 shows a method of providing lubrication to a mechanism.

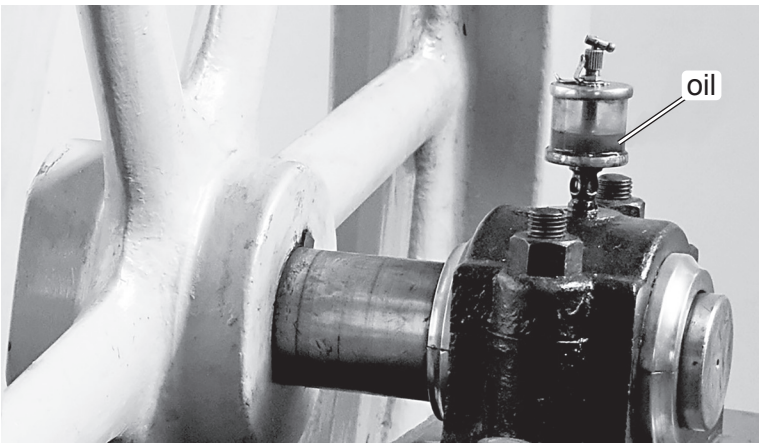

Fig. 6.1

(a) Give **two** benefits of providing lubrication by the method shown in Fig. 6.1.

1 .....

.....

2 .....

.....
[2]

(b) Explain why lubrication is important in a mechanism with moving parts.

.....

.....

.....

..... [2]

7 Complete table 7.1 to give an alternative format for showing each electrical measurement.

Table 7.1

Electrical measurement	Alternative format
0.097 V	mV
1500 pF	nF
0.001 A	mA
36 000 000 Ω	MΩ

[4]

8 Fig. 8.1 shows a microswitch.

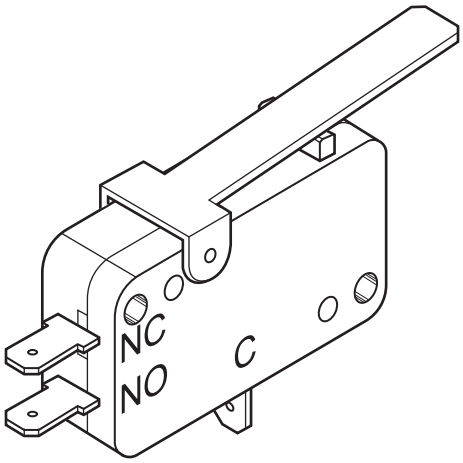

Fig. 8.1

(a) Draw the circuit symbol for the microswitch.

[1]

(b) Describe how the microswitch works.

.....

.....

.....

..... [2]

9 Describe the difference between a PTM switch and a PTB switch.

.....

.....

.....

..... [2]

Section B

Answer **one** question from this section.

10 Fig. 10.1 shows an archery bow.

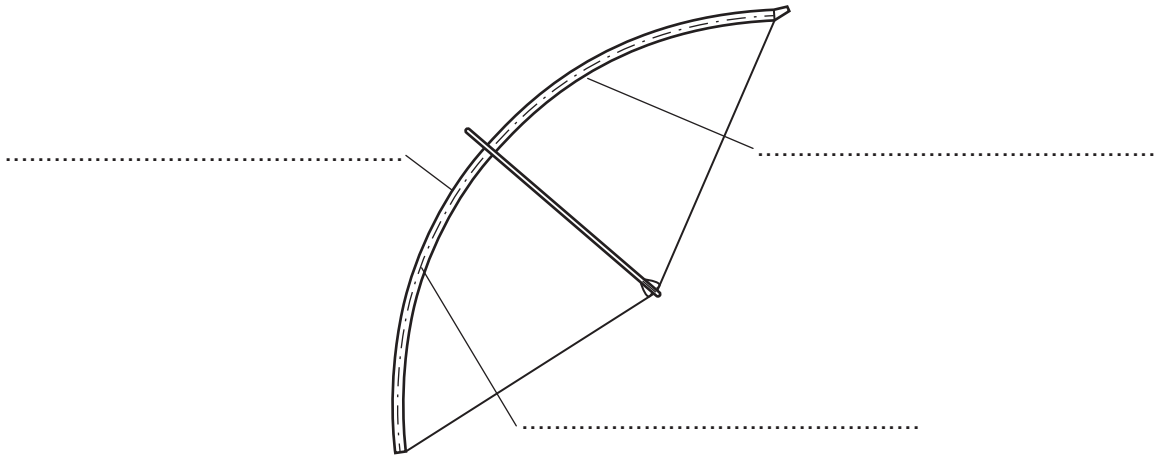

Fig. 10.1

(a) **(i)** Label the area of the bow that is:
- in compression
- in tension
- the neutral axis. [3]

(ii) Give **two** benefits of using composite laminated materials, rather than a single piece of wood, to make a bow.

1 .....

.....

2 .....

.....
[2]

(iii) Give **one** property of an adhesive needed when joining the materials in a composite laminated bow.

.....

..... [1]

(iv) Name **two** composites and the materials that are used in their manufacture.

Name of composite 1 .....

Materials used in manufacture .....

Name of composite 2 .....

Materials used in manufacture .....
[6]

(b) Fig. 10.2a shows a structure used in a multi-storey building to support window openings. The structure includes ties and struts.

Fig. 10.2a

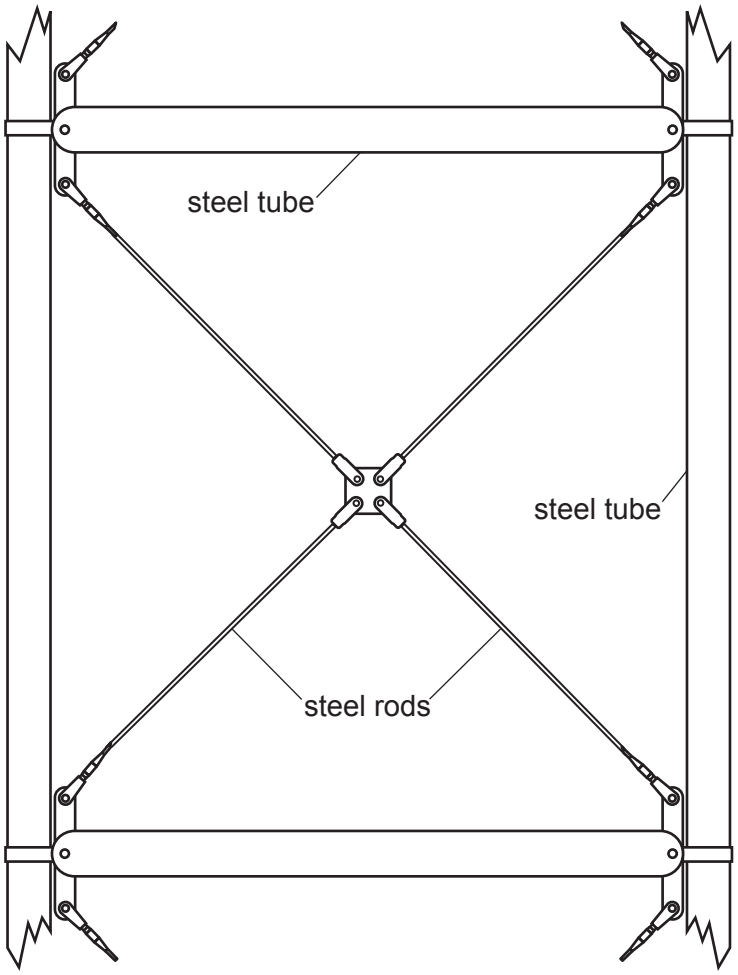

Fig. 10.2b

(i) Add labels for a tie and a strut on Fig. 10.2b. [2]

(ii) Ties are often made adjustable in length.
Use sketches and notes to show **one** way of making a tie adjustable in length.

[3]

(c) **(i)** Fig. 10.3 shows two steel beams of equal length.

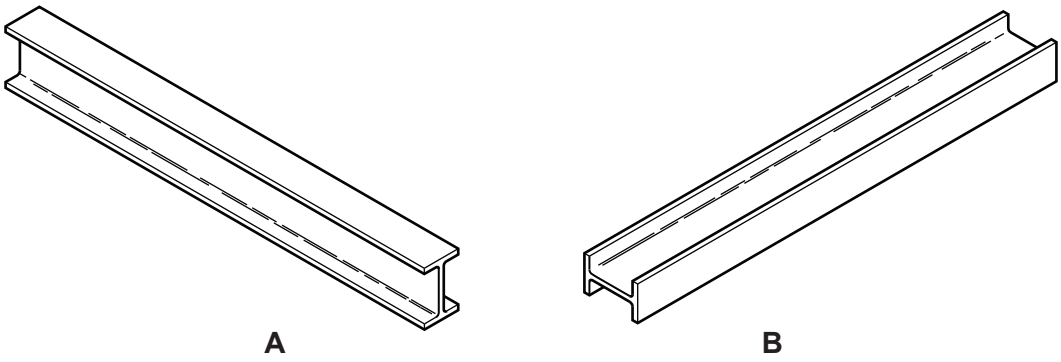

Fig. 10.3

Explain why beam **A** can withstand more load than beam **B** without bending in the centre.

.....

.....

..... [2]

(ii) Calculate the reactions $\mathbf{R_1}$ and $\mathbf{R_2}$ when beam **A** is loaded as shown in Fig. 10.4.

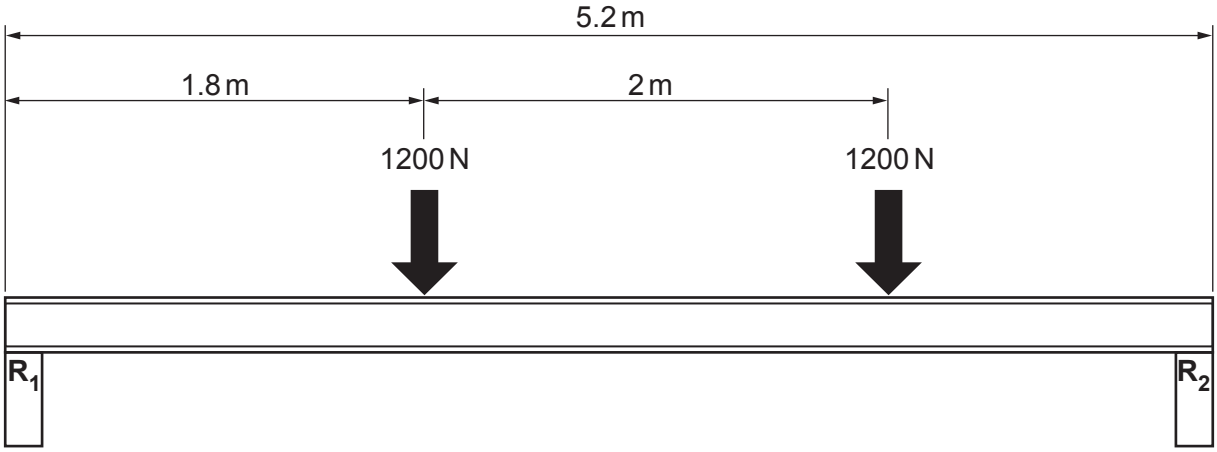

Fig. 10.4

.....

.....

.....

.....

.....

..... [4]

(iii) Describe how Factor of Safety contributes to the design of a structure that uses beams.

.....

.....

..... [2]

11 Fig. 11.1 shows a bolt with a screw thread cut into it.

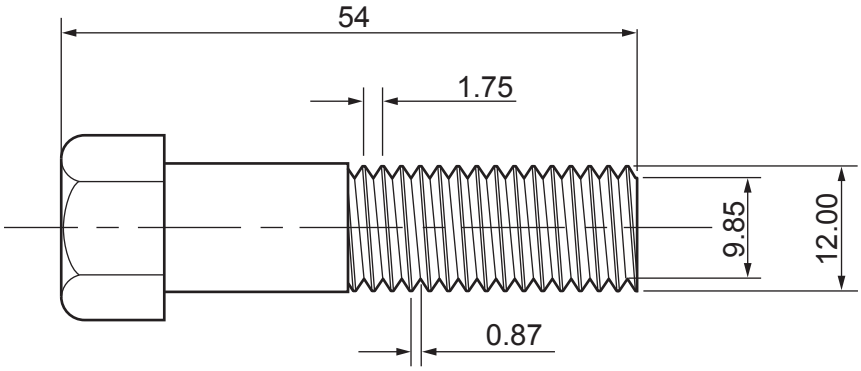

Fig. 11.1

(a) **(i)** State the conversion of motion that takes place when using a screw thread.

..... to ..... [1]

(ii) Screw threads are made in standard sizes.
Give **two** benefits of using standard sizes of thread.

1 .....

2 .....
[2]

(iii) State which **two** dimensions in Fig. 11.1 form part of the standard size for the thread.

1 .....

2 .....
[2]

(b) Fig. 11.2 shows two types of clothes peg used to secure clothes to a washing line. Both types of clothes peg use leverage when in use.

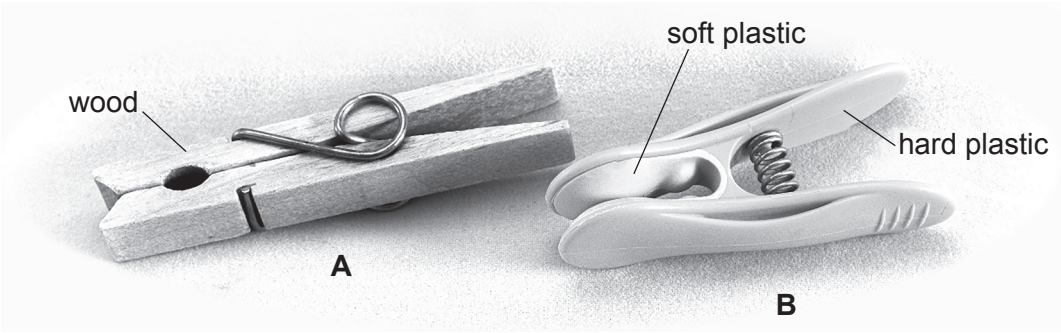

Fig. 11.2

(i) Mark the position of the fulcrum on peg **A**. [1]

(ii) Describe the difference in operation of the springs in each clothes peg.

.....

.....

.....

..... [2]

(iii) Explain why peg **A** is considered a more sustainable product than peg **B**.

.....

.....

.....

..... [2]

(c) Fig. 11.3 shows a derailleur gear mechanism on a bicycle.

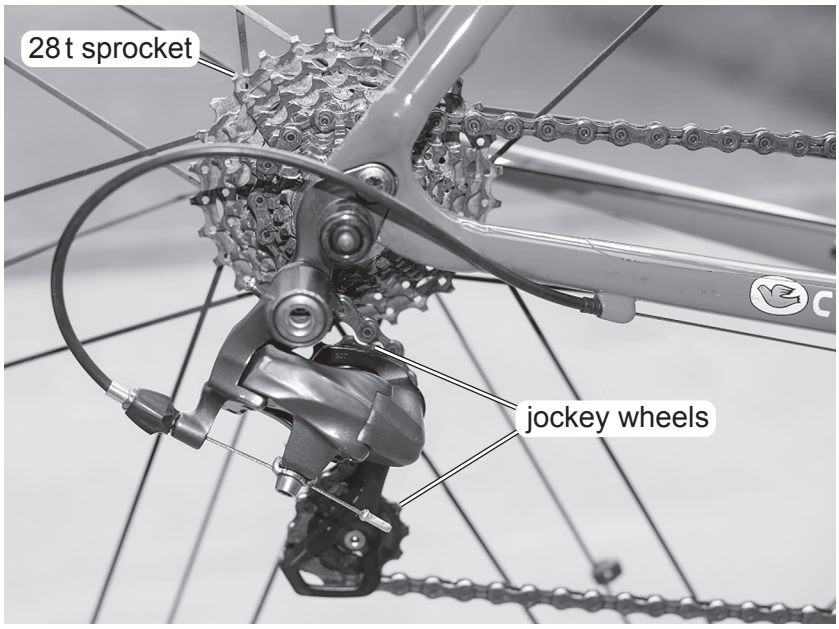

Fig. 11.3

(i) Describe the purpose of the derailleur gear mechanism.

.....

.....

.....

..... [2]

(ii) The jockey wheels use sealed ball bearings to allow free rotation.
Give **two** reasons why this method has been chosen rather than individual ball bearings.

1 .....

.....

2 .....

.....
[2]

(iii) The chainwheel that drives the bicycle has 49 teeth.
Calculate the Velocity Ratio when the chain is on the 28-tooth rear sprocket as shown in Fig. 11.4.

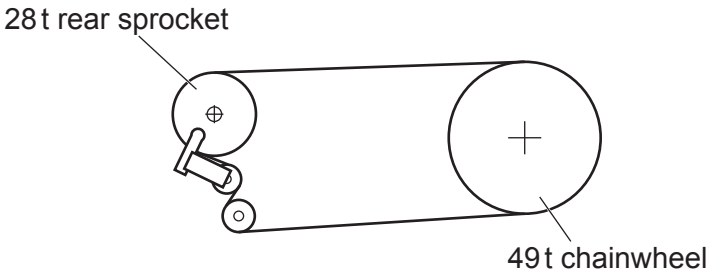

Fig. 11.4

.....

.....

.....

..... [2]

(iv) Calculate the speed of the rear wheel if the chainwheel is rotating at 78 rpm.

.....

.....

.....

..... [2]

(v) Explain why the drive system will not be 100% efficient.

.....

.....

.....

.....

..... [3]

(d) Fig. 11.5 shows a linkage used to operate railway signals.

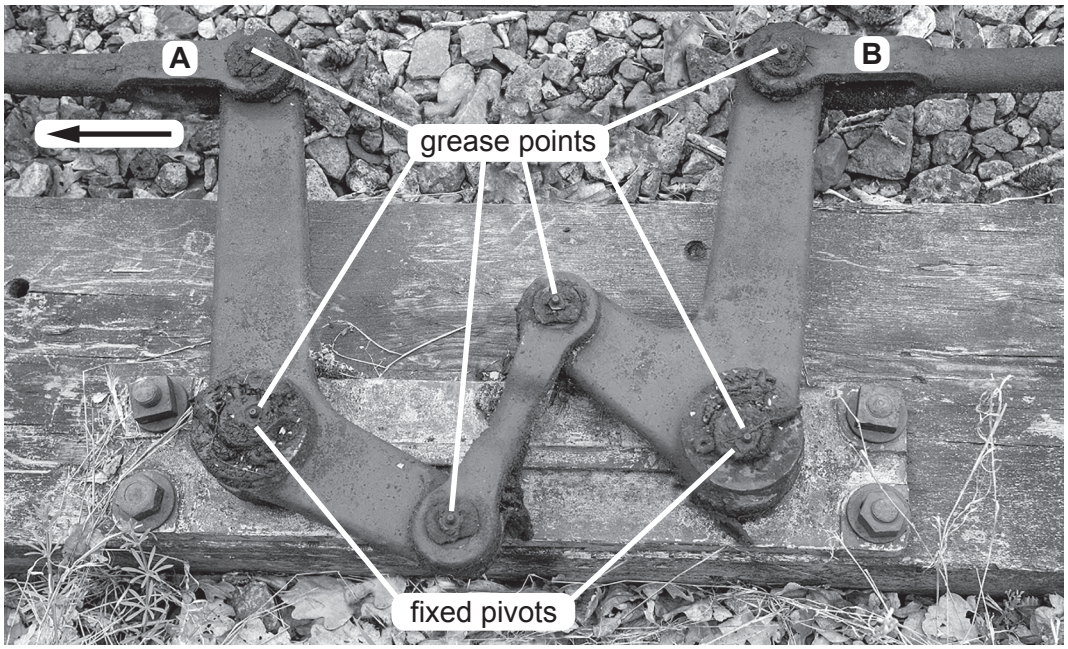

Fig. 11.5

(i) Give **two** reasons why grease has been used to lubricate the moving parts of the linkage rather than oil.

1 .....

2 .....
[2]

(ii) Describe the effect on the linkage of moving rod **A** in the direction of the arrow.

.....

.....

.....

..... [2]

12 **(a)** Fig. 12.1 shows four logic gate symbols.

(i) Name each symbol on Fig. 12.1.

....

Fig. 12.1 [4]

(ii) Describe what a NOT gate is.

..... [1]

(iii) Draw a NOT gate made from one of the gates in Fig. 12.1.

[2]

(iv) The output signal from a logic gate can only provide a very low current.
Fig. 12.2 shows a method of amplifying the output current in the output signal from a logic circuit.

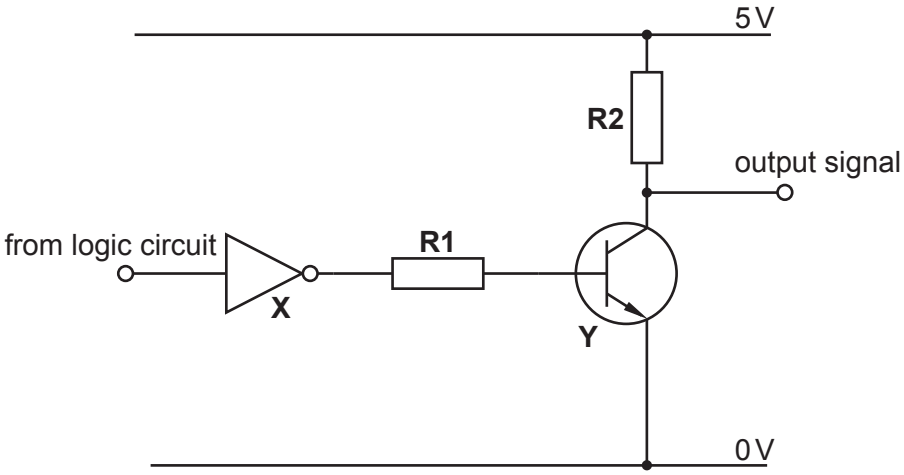

Fig. 12.2

State the purpose of components **R1**, **R2**, **X** and **Y** in the circuit.

R1 .....

R2 .....

X .....

Y .....

[4]

(b) Fig. 12.3 shows part of a circuit for a light operated switch which will give a high output in the dark.
The circuit uses an operational amplifier to compare voltages at **X** and **Y**.

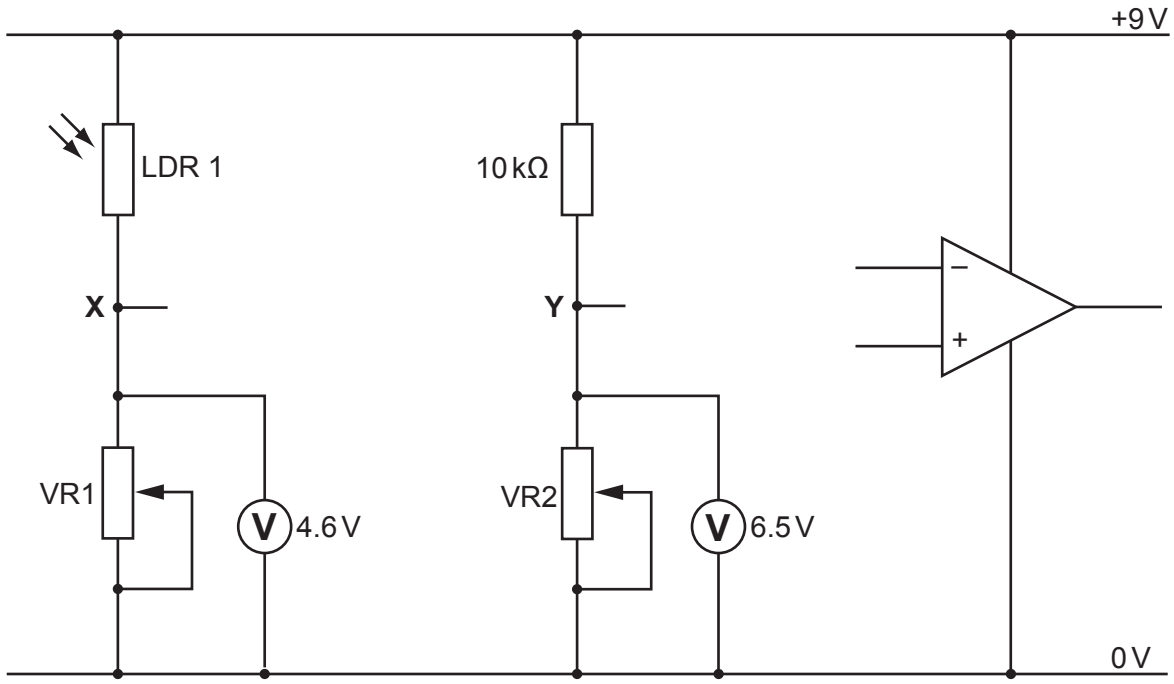

Fig. 12.3

(i) On Fig. 12.3 make the following connections:
- point **X** to the inverting input of the op-amp
- point **Y** to the non-inverting input of the op-amp.

[2]

(ii) Describe what happens to LDR1 and the voltage at point **X** when the light level falls.

.....

.....

..... [3]

(iii) Calculate the resistance setting of VR2 for the output voltage shown.

Use the formula $V_{out} = V_{in} \times \frac{R_2}{R_1 + R_2}$

.....

.....

.....

.....

..... [4]

(c) Fig. 12.4 shows the outline of the comparator IC.

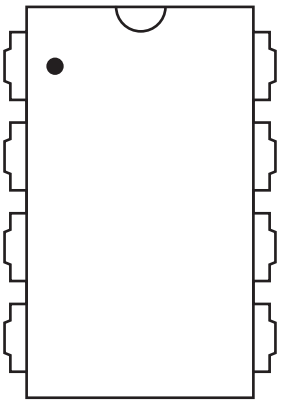

Fig. 12.4

(i) Add the pin numbers to the outline of the IC. [2]

(ii) Fig. 12.5 shows the solder side of a printed circuit board with an IC holder ready to be soldered in place.

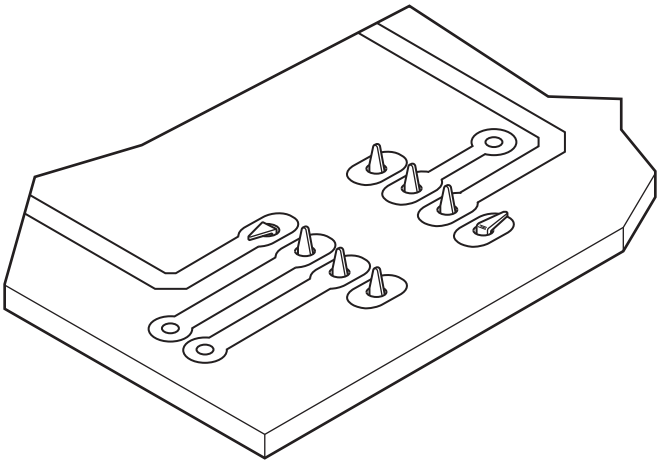

Fig. 12.5

Give the reason for two of the pins being bent over.

.....

..... [1]

(iii) State **two** health and safety procedures that should be used when soldering components to a circuit board.

1 .....

.....

2 .....

.....
[2]

BLANK PAGE

BLANK PAGE

BLANK PAGE

Permission to reproduce items where third-party owned material protected by copyright is included has been sought and cleared where possible. Every reasonable effort has been made by the publisher (UCLES) to trace copyright holders, but if any items requiring clearance have unwittingly been included, the publisher will be pleased to make amends at the earliest possible opportunity.

To avoid the issue of disclosure of answer-related information to candidates, all copyright acknowledgements are reproduced online in the Cambridge Assessment International Education Copyright Acknowledgements Booklet. This is produced for each series of examinations and is freely available to download at www.cambridgeinternational.org after the live examination series.

Cambridge Assessment International Education is part of Cambridge Assessment. Cambridge Assessment is the brand name of the University of Cambridge Local Examinations Syndicate (UCLES), which is a department of the University of Cambridge.

© UCLES 2022